3P Technik

3P Floating Pump Intake

Art.-Nr. 4000600

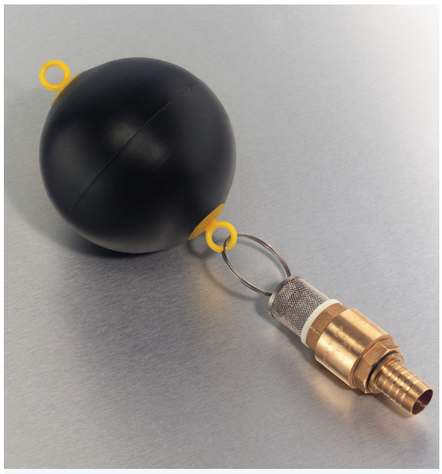

Description:

The Floating Pump Intake represents the 4th cleaning step in the rainwater system.

For the extraction of the cleanest rainwater from the storage tank.

Consisting of:
- Floating ball, diameter 15 cm
- Filter inlet sleeve (mesh width 1,2 mm)
- Check valve, 1"
- Connection spout

For the connection of suction pipes Ø 36 mm.

Technical Data:

Floating ball Ø 15 cm with two ears.
Material: Polyethylen

Filter basket made of stainless steel with 1" AG made of plastic
Mesh size 1,2 mm

Check Valve 1" made of brass
Hose clip Ø 32 mm, 1" AG made of brass with rubber seal

Weight: 0,5 kg

How it works:

The 3P Intake floats at all times, suspended just below the water surface where the cleanest water lies. From this position the water is extracted by the pump. A ball float, filled with air, suspends the intake, which has a further filter and a check valve.

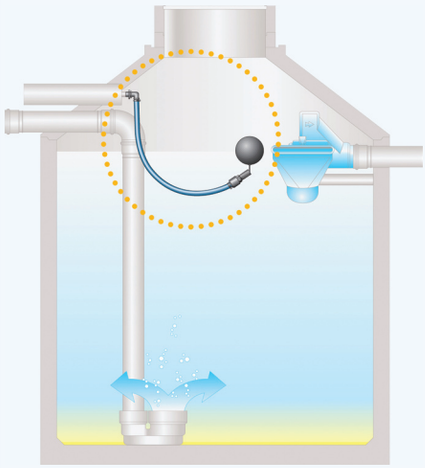

Accessories:

3P Suction pipe Art.-Nr. 4000642

Suction pipe Ø 36 mm
Special suction pipe, resists biological growth. High quality.

Text for invitation of tenders:

Pos.	Quantity	Article	Price in €
1.1	_____	3P Floating Pump Intake For the extraction of the cleanest rainwater from the storage tank. Consisting of floating ball with suction basket, check valve and connection fittings. With x m suction pipe, food safe	_____

Packing unit:

Covering box 790x575x700mm: 64 pieces
Pallet: 384 pieces

EAN:

Observations:

3P Technik

3P Floating Pump Intake with suction pipe

Art.-Nr. 4000620

Description:

3P Floating Pump Intake with 2 m suction pipe for the extraction of the cleanest rainwater from the storage tank.

The Floating Pump Intake represents the 4th cleaning step in the rainwater system.

For the connection of PE-pipes, Ø 32 mm.

Consisting of:
- Floating ball Ø 15 cm
- Filter inlet sleeve (mesh width 1,2 mm)
- Check valve 1"
- Connection spout
- Rack for 1"-PE-pipes
- 2 m suction pipe

Technische Daten:

Floating ball Ø 15 cm with two ears.
Material: Polyethylen

Filter basket made of stainless steel with 1" AG made of plastic
Mesh size 1,2 mm

Check Valve 1" made of brass
Hose clip Ø 32 mm, 1" AG made of brass

2 m suction pipe Ø 36 mm
Special suction pipe, resists biological growth. High quality. Food safe.

Weight: 2,3 kg

How it works:

The floating ball makes sure that the suction basket of the floating pump intake is always situated aprox. 15 to 20 cm below the water surface. It ensures that no water directly from the surface (which is often charged with a film of grease and powder) can be sucked in.

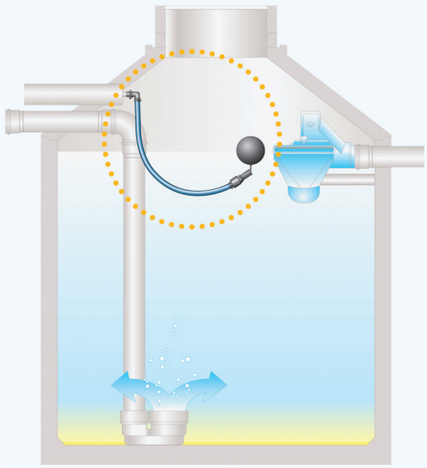

Example of using:

Floating pump intake installed in a concrete tank.

Text for invitation of tenders:

Pos.	Quantity	Article	Price in €
1.1	_____	3P Floating pump intake with suction pipe 2 m For the extraction of the cleanest rainwater from the storage tank. Consisting of floating ball with suction basket, check valve and connection fittings. With 2 m suction pipe, food safe	_____

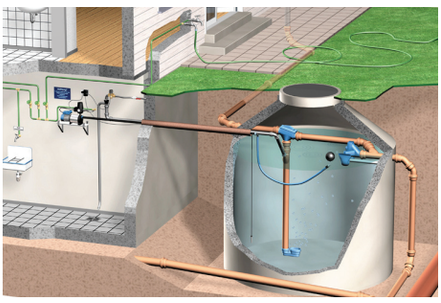

Packing unit:

Covering box 790x575x700mm: 20 pieces
Pallet: 120 pieces

EAN: