3P Giant Overflow Siphon DN200

Art.-Nr. 4000280 without rodent barrier
Art.-Nr. 4000285 with rodent barrier

3P Technik

3P Giant Overflow Siphon DN200

Giant Overflow Siphon with odour trap and optional rodent barrier.

Regular overflowing of the rainwater tank is essential as it prevents the formation of a surface matt of light particles which reduce oxygen diffusion at the water surface. This keeps the water fresh by stopping any anaerobic decomposition from taking place.

Also availble with high-grade stainless steel rodent barrier.

Ideal for use in large-scale installations.

The 3P Giant Overlfow Siphon's outlet fits any DN 200 pipe.

The overflow siphon must be securely attached to the tank, since it has a substantial weight when filled. The Giant Overflow Siphon has several connection points in order to fasten it inside the tank. A high-temperature resistant (HT) DN 50 pipe can be attached to the bracing point to act as a supporting bracket.

Tanks fitted with 3P Overflow Siphons and 3P Calmed Inlets become eligible for the ECA scheme.

How it works:

Dirt particles, which are lighter than water (e.g. pollen) float on the water's surface.

The design of the Overflow Siphon ensures it removes the floating debris. Regular overflowing of the cistern is essential for a high water quality. The Overflow skims the top layer enabling oxygen diffusion at the water surface.

1. Inlet with rodent barrier

2. Conection point for secure attachment.

3. DN 50 pipe connection point for use as a bracing point.

4. DN200 outlet..

Technical Data:

Pipe connection size: DN200
Material: Polyethylene.
Rodent Barrier: High-grade stainless steel.

Weight: 7.5 kg

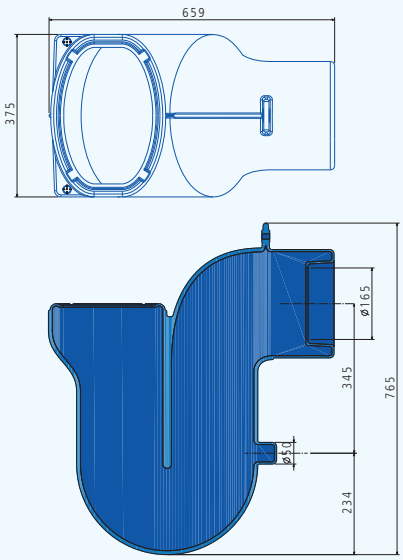

3P Giant Overflow Siphon DN200

Art.-Nr. 4000280 without rodent barrier
Art.-Nr. 4000285 with rodent barrier

Example of use 1:

Connecting a DN200 plastic pipe.

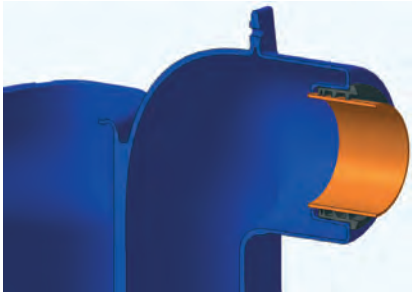

Proposal:

Pos.	Quantity	Article	Price in £
1.1	_____	3P Giant Overflow Siphon DN200 Giant Overflow Siphon for installation in larger rainwater tanks. Overflow skims off floating layer of debirs and incorporates an odour trap. 4000280 without rodent barrier 4000285 with rodent barrier	_____

Notes:

Packaging Unit:

m^3-Box: 6 Pieces
Pallet: 12 Pieces

EAN:

4000280	4018712001457
4000285	4018712001464