3P Giant Calmed Inlet DN150

Art.-Nr. 4000150

3P Technik

3P Giant Calmed Inlet DN150

Provides a calmed inlet for rainwater in larger storage tanks.

Dirt particles denser than water sink to the bottom of a rainwater tank and form a sediment layer. The Giant Calmed Inlet prevents the incoming rainwater from disturbing this settled sediment layer, keeping the water free of dirt particles.

The Giant Calmed Inlet also supplies the lower water layers within the tank with oxygen so that it remains fresh.

Ideal for the use in large-scale installations. It is suitable for DN 150 plastic pipe.

The calmed inlet represents the second cleaning step in the rainwater tank.

Tanks fitted with 3P Overflow Siphons and 3P Calmed Inlets become eligible for the ECA scheme.

How it works:

1. The rain water flows into the Giant Calmed Inlet through a DN150 pipe.

2. As it flows through the calmed inlet the velocity of the water slows down substantially and enters the rainwater tanks with no turbulence.

3. The calmed rainwater supplies more oxygen to the rainwater in the lower parts of the tank, therefore keeping the water fresh by preventing anaerobic decompsition.

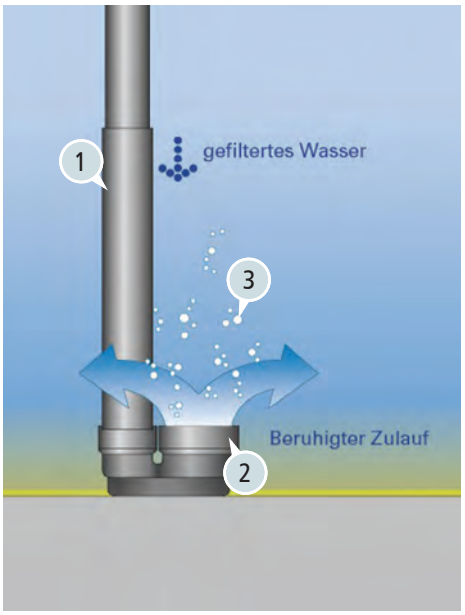

Technical data:

Pipe connection size: DN150

Material: Polyethylene

Weight: 6 kg

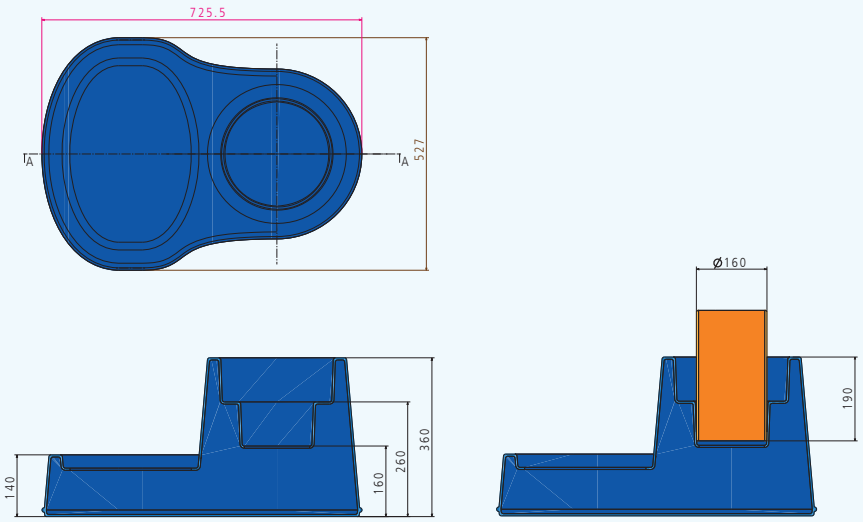

3P Giant Calmed Inlet DN150

Art.-Nr. 4000150

3P Technik

Example of use 1:

Connecting a DN 150 plastic pipe.

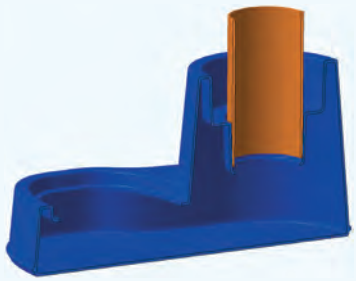

Proposal:

Pos.	Quantity	Article	Price in £
1.1	_____	3P Giant Calmed Inlet DN150	_____

Giant Calmed Inlet for installation in larger rainwater tanks.

Prevent disturbance to the sediment layer in the tank.

Notes:

Packaging Unit:

m^3-Box: 8 Pieces
Pallet: 16 Pieces

EAN:

EAN: 4018712001419